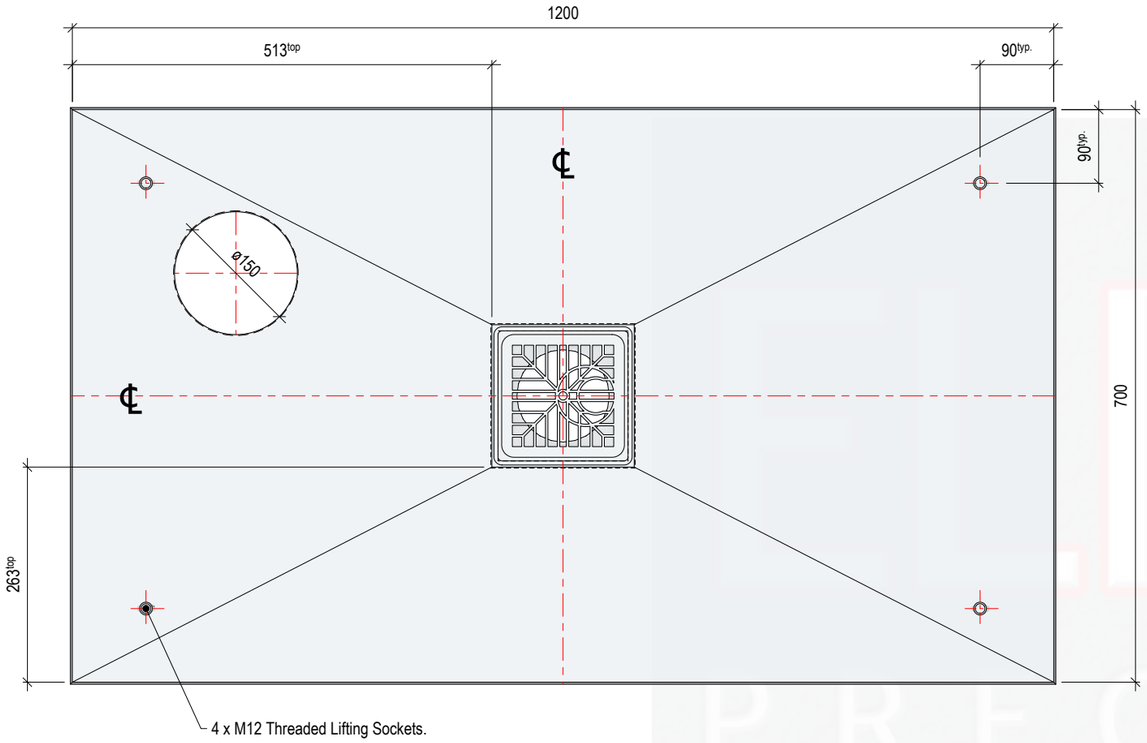

Isometric View of the Heat Pump Support Base
shown fitted with a typical 110mm sq. Gully Hopper.

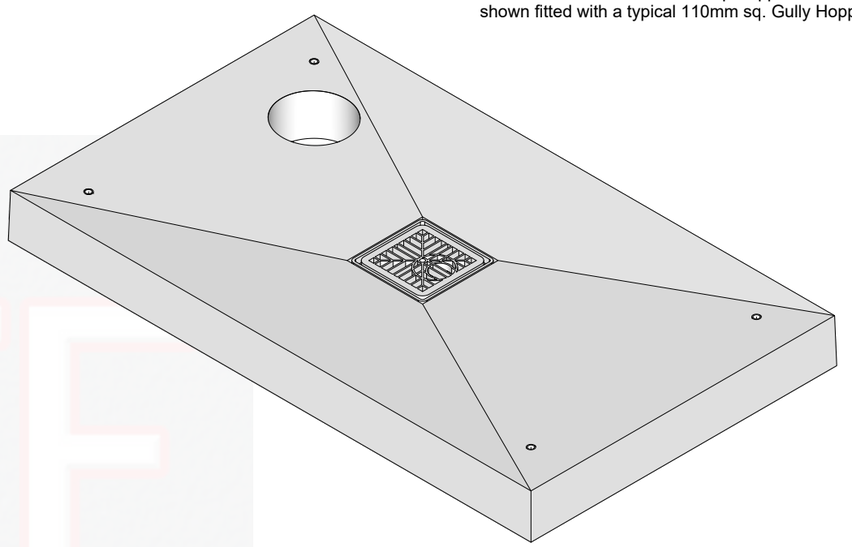

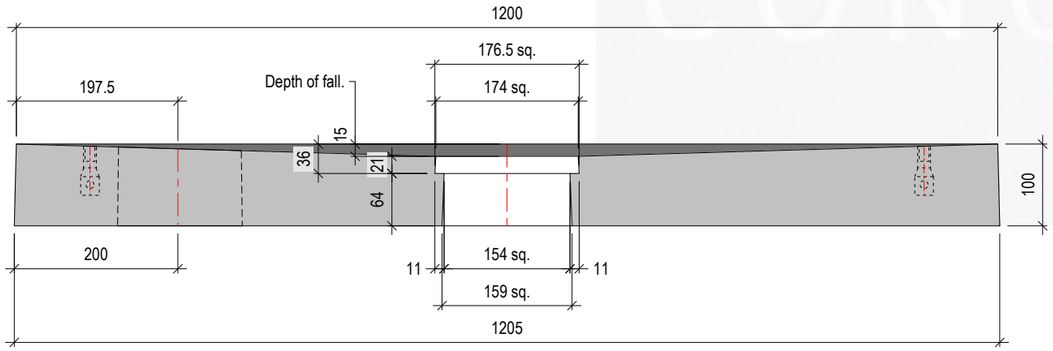

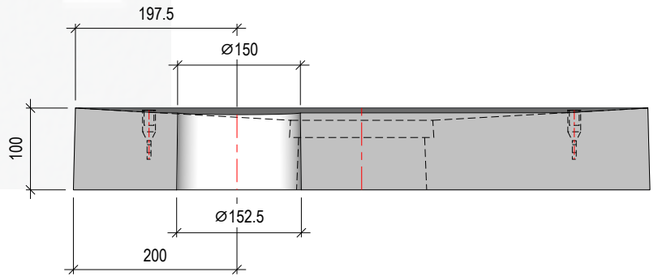

*Unit reinforced with 5.5mm dia Rebar.
25mm min. concrete cover.

Unit Weight approx. 178kg

REV	DATE	REASON FOR ISSUE	DRN	APP	REV	DATE	REASON FOR ISSUE	DRN	APP
					O	24-02-26	First Issue.	CTC	RMD

TITLE

Heat Pump Support Base
1200mm x 700mm x 100mm
HPSB1200700100

ELITE PRECAST CONCRETE LTD
UNIT O, HALESFIELD 9
TELFORD TF7 4QW
Tel : 01952 588885
www.eliteprecast.co.uk
email : sales@eliteprecast.co.uk

DRN	CHKD	DATE	SIZE	SCALE	DRG	REV
CTC	RMD	24-02-26	A3	1:7.5	HPSB1200700100	A